124-1 Power Memory Mirrors

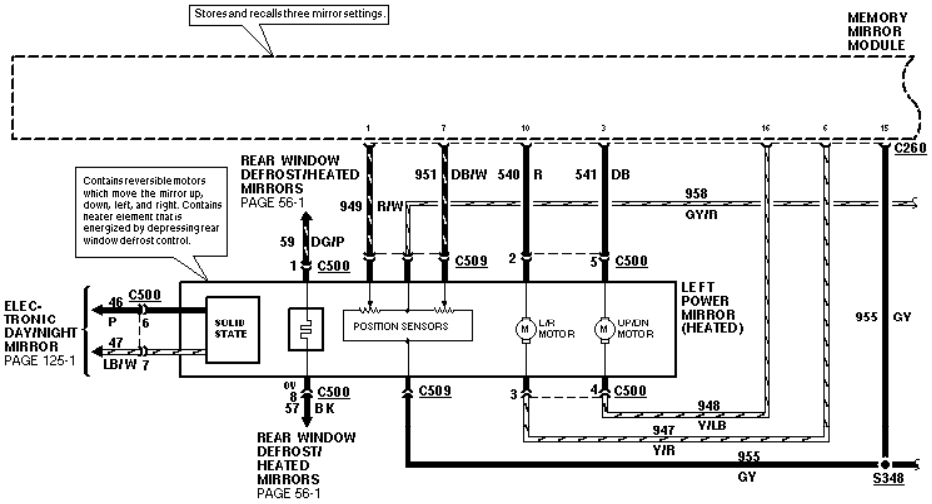

- Component
- Connector
- Splice
- Page
- Harness

124-2 Power Memory Mirrors

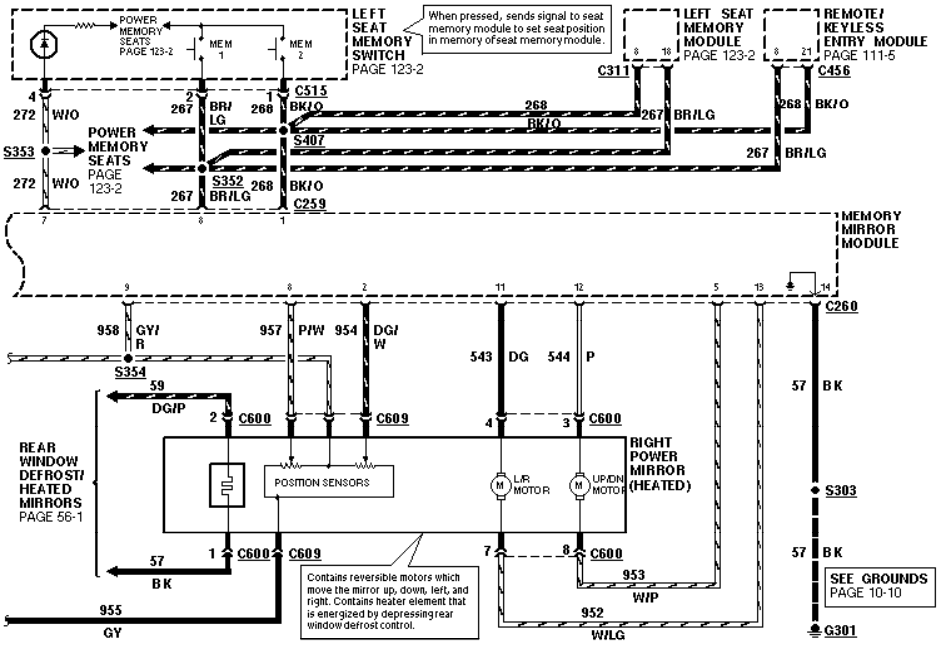

- Component
- Connector
- Ground
- Splice
- Page
- Harness

124-3 Power Memory Mirrors

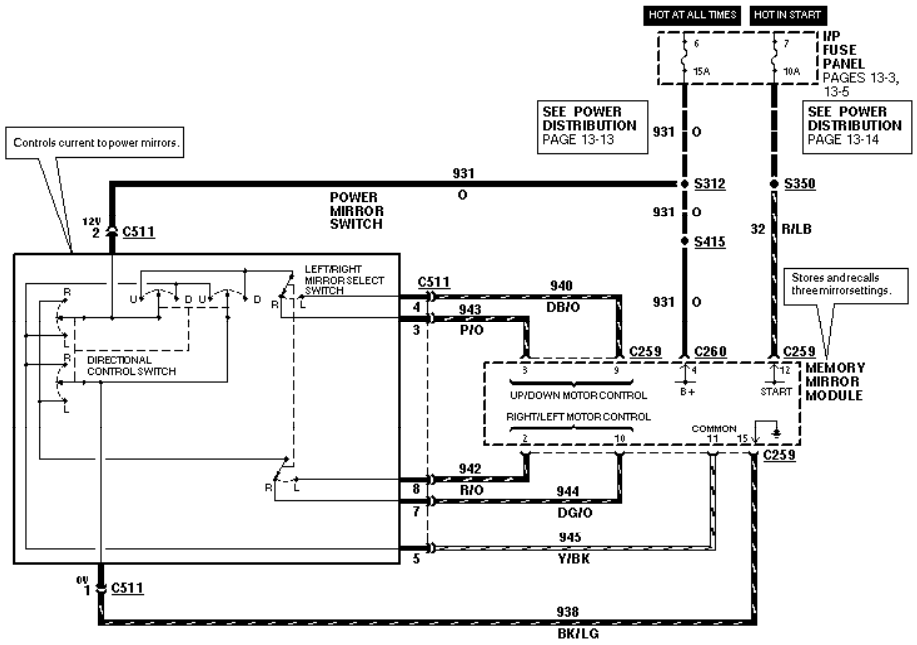

- Component
- Connector
- Splice
- Page
- Harness