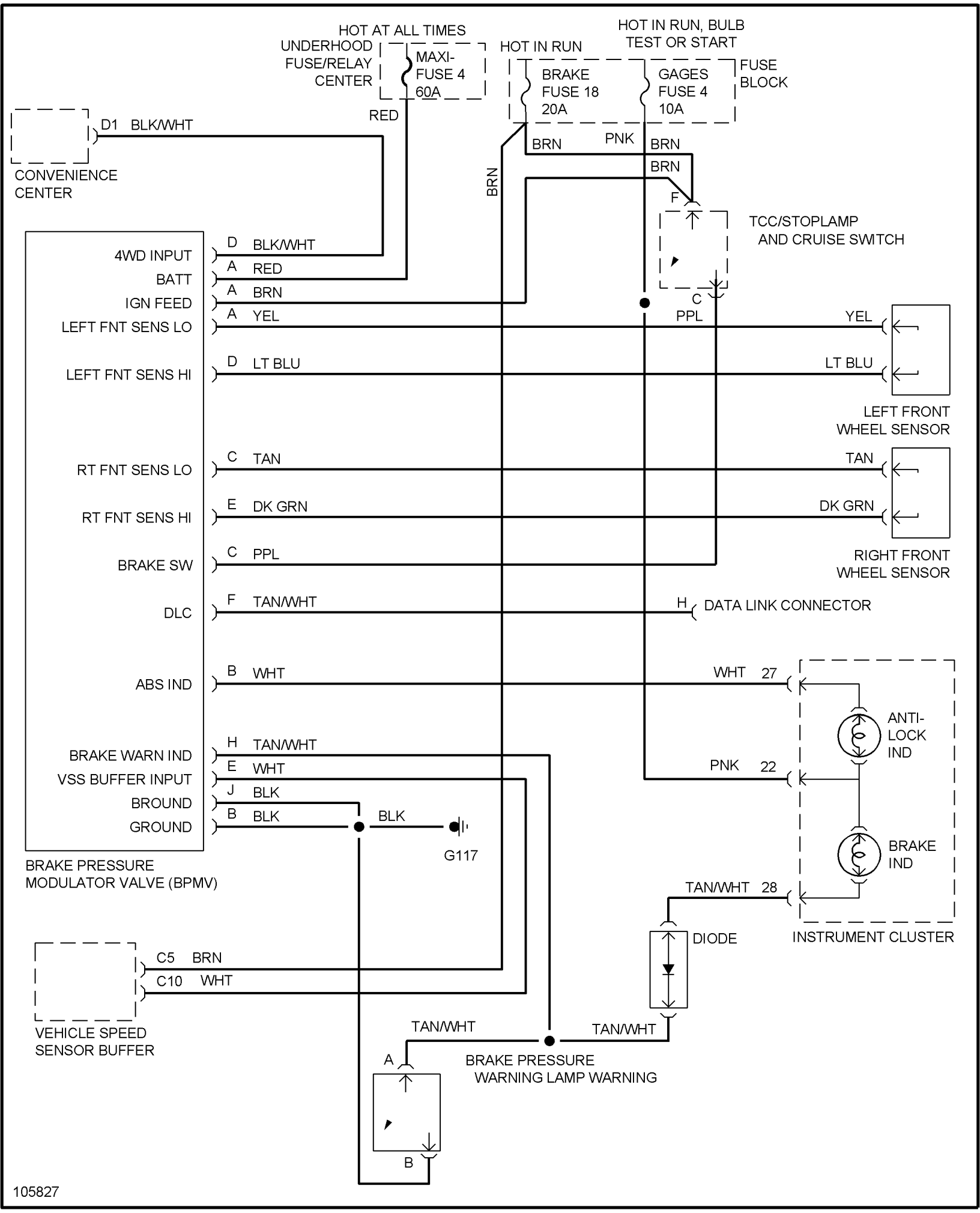
HOT AT ALL TIMES
UNDERHOOD FUSE/RELAY CENTER
MAXI-FUSE 4 60A
HOT IN RUN
HOT IN RUN, BULB TEST OR START
BRAKE FUSE 18 20A
GAGES FUSE 4 10A
FUSE BLOCK
RED
D1 BLK/WHT
CONVENIENCE CENTER
BRN
PNK
BRN
BRN
BRN
F
TCC/STOPLAMP AND CRUISE SWITCH
C
PPL
4WD INPUT
D BLK/WHT
BATT
A RED
IGN FEED
A BRN
LEFT FNT SENS LO
A YEL
YEL
LEFT FNT SENS HI
D LT BLU
LT BLU
LEFT FRONT WHEEL SENSOR
RT FNT SENS LO
C TAN
TAN
RT FNT SENS HI
E DK GRN
DK GRN
RIGHT FRONT WHEEL SENSOR
BRAKE SW
C PPL
DLC
F TAN/WHT
H DATA LINK CONNECTOR
ABS IND
B WHT
WHT 27
ANTI-LOCK IND
BRAKE WARN IND
H TAN/WHT
VSS BUFFER INPUT
E WHT
PNK 22
BROUND
J BLK
GROUND
B BLK
BLK
G117
BRAKE IND
BRAKE PRESSURE MODULATOR VALVE (BPMV)
TAN/WHT 28
DIODE
INSTRUMENT CLUSTER
C5 BRN
C10 WHT
VEHICLE SPEED SENSOR BUFFER
TAN/WHT
TAN/WHT
A
BRAKE PRESSURE WARNING LAMP WARNING
B
105827